9.3 Gas pressure spring replacement

If the mobile dryer does not park in highest or lowest position but falls or raises slightly by itself, tighten the 4 bolts indicated with the letter "C" in fig 2.

If the dryer arm still does not park or becomes heavy to adjust, the gas pressure spring must be replaced.

Attention!
Due to high weight and complexity it is recommended to be two persons or one person with a lifting device when performing this service.

1. Remove the four screws fastening the cover that is located on either side of the arm (fig 1).
2. Place the parallel arm in the farmost upright position (fig 2).
3. Before removing the pins holding the gas spring, as much pressure as possible from the gas spring should be relieved. To do this, raise the arm slightly until the pins are loose.
   Attention!
   At all times when the gas spring is not securely in position with pins and locking rings, the arm can fall down heavily from it´s upright position and create great danger.
4. Remove the locking rings and the two pins. Move the gas spring slightly upwards/forward and then remove it (fig 2).
5. Place the new gas spring in the same direction as the old one. Reassemble in the reversed order.

Attention! Ensure that the locking rings are refastened properly.

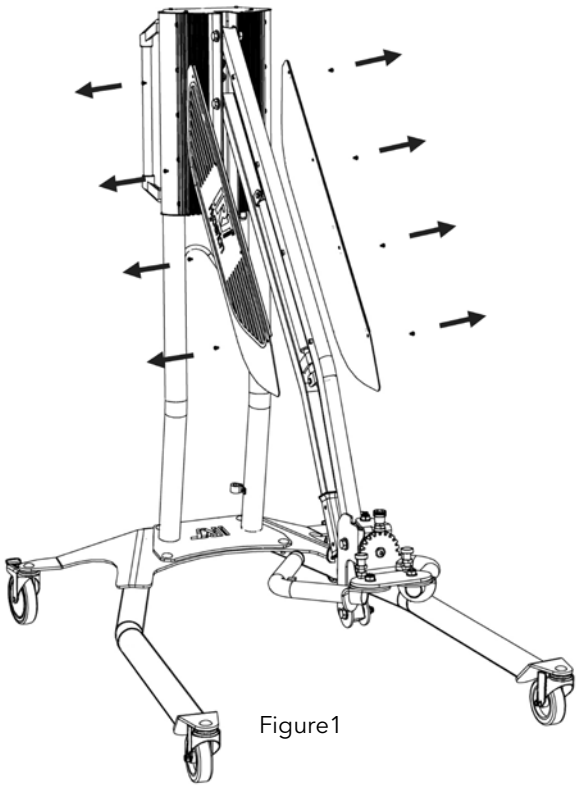

Figure1

10. Spare parts

For a complete spare parts list, please contact your distributor for information. The following spare parts are the most common ones.

Part	Part nr.
Lamp 1 kW	102700
Filter	713576
Gas pressure spring 850 N (one cassette)	714060
Gas spring 1400 N (two cassettes)	713614
Solid state relay	750227
Fan 12 V DC	711186

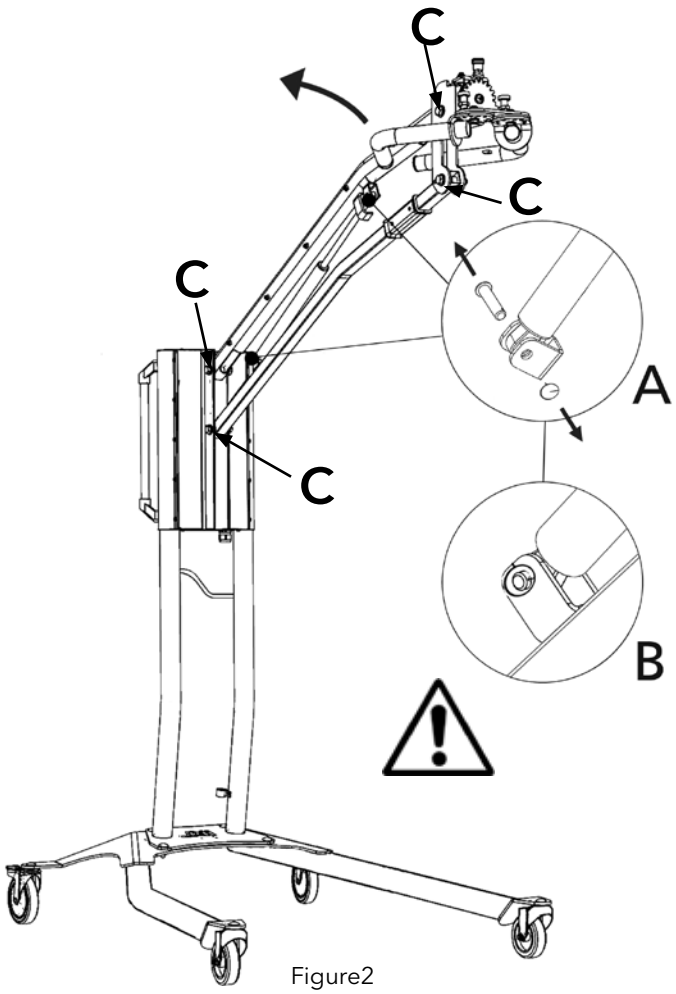

Figure2