

140200001

Lance Ibimar 13 - 1,2 meter



140200002

Sand/water blasting kit



149900005

Metal sieve



SBL1SPS

Sparepart set for Ibimar 13 mini



SBTIL10

Suction for dust free blasting, complete



SBTIL20

Back pack, carry system



1

DYS1-5, DYS2, DYS2-5, DYS3, DYS3-5, DYS4, DYS4-5

Cylindrical nozzle 1,5 mm - 4mm



1

DYSVEN2-5, DYSVEN4

Venturinozzle 2,5 mm
Venturinozzle 4 mm



2

SBALU20

Lifting handle IBIX9



3

SBALU30

Support leg aluminium

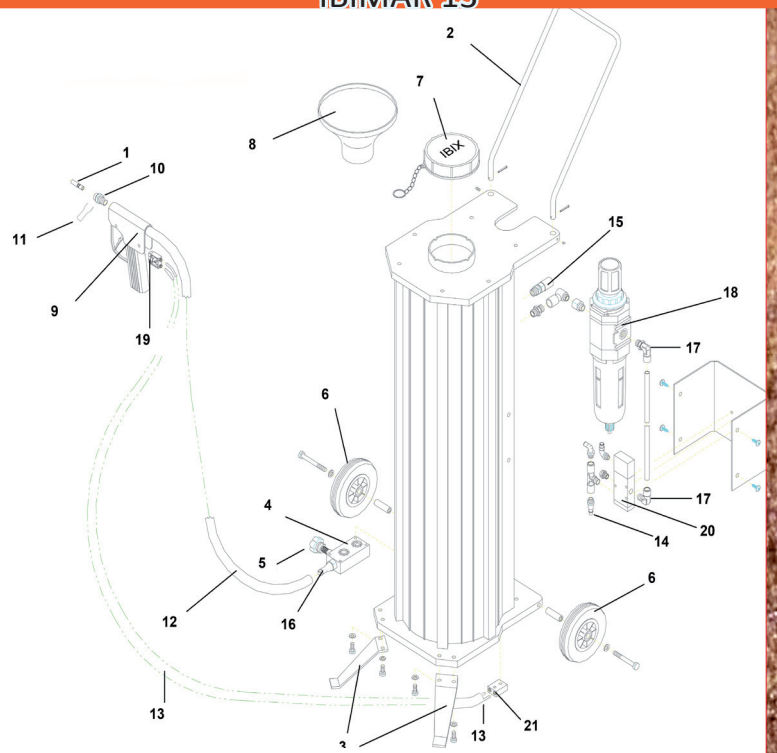

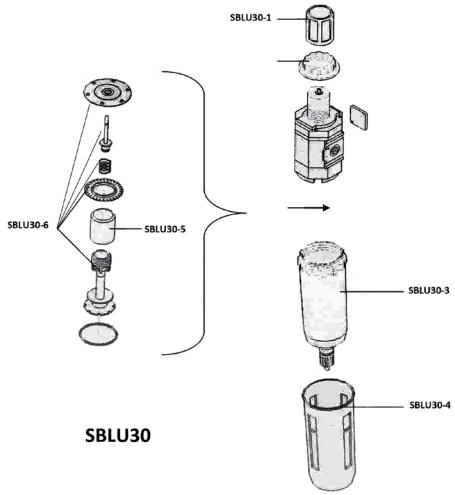

SBLU30

NORSPRAY AS
Maskinveien 10
4033 STAVANGER

TELEFON: (+47) 51 22 07 00
E-POST: post@norspray.no

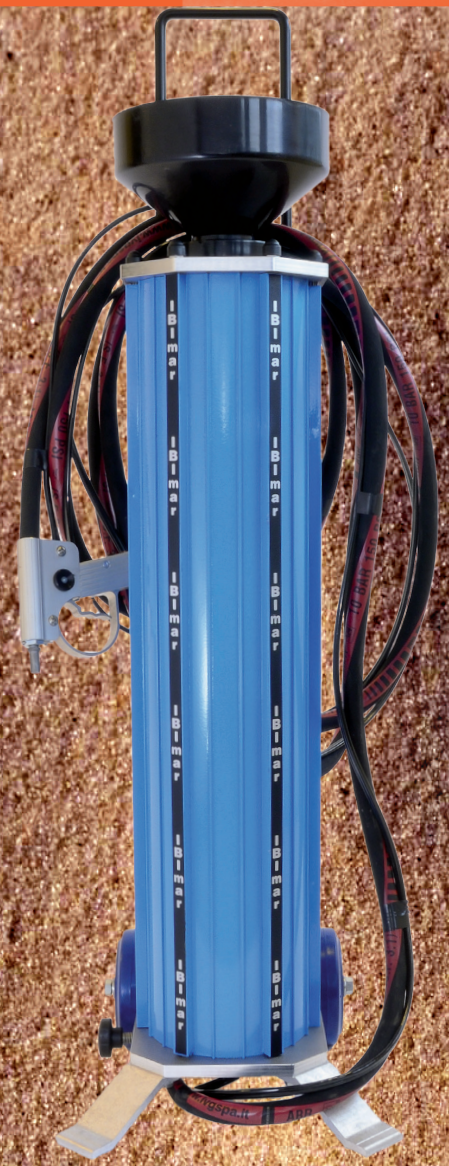

NORSPRAY

Utstyr til overflateindustrien